REVISIONS						
ZONE	LTR	DESCRIPTION	CHANGE No	DATE	BY	APPR'D
	AA	INITIAL RELEASE	75960	15JUL13	SLK	DJC
	AB	UPDATED COVERPLATE	DR53394	31AUG15	JMM	BLM

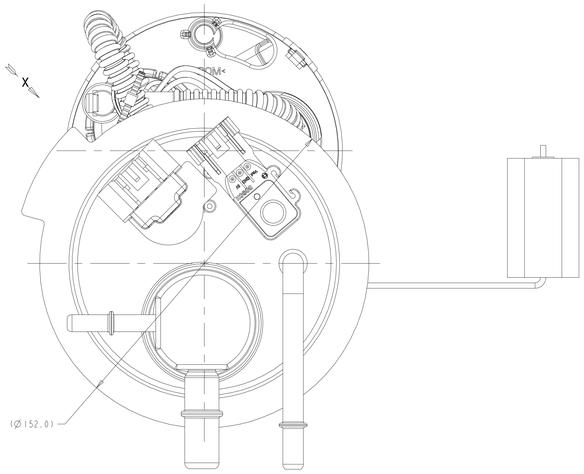

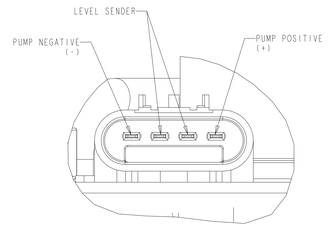

VIEW X
SCALE 2:1

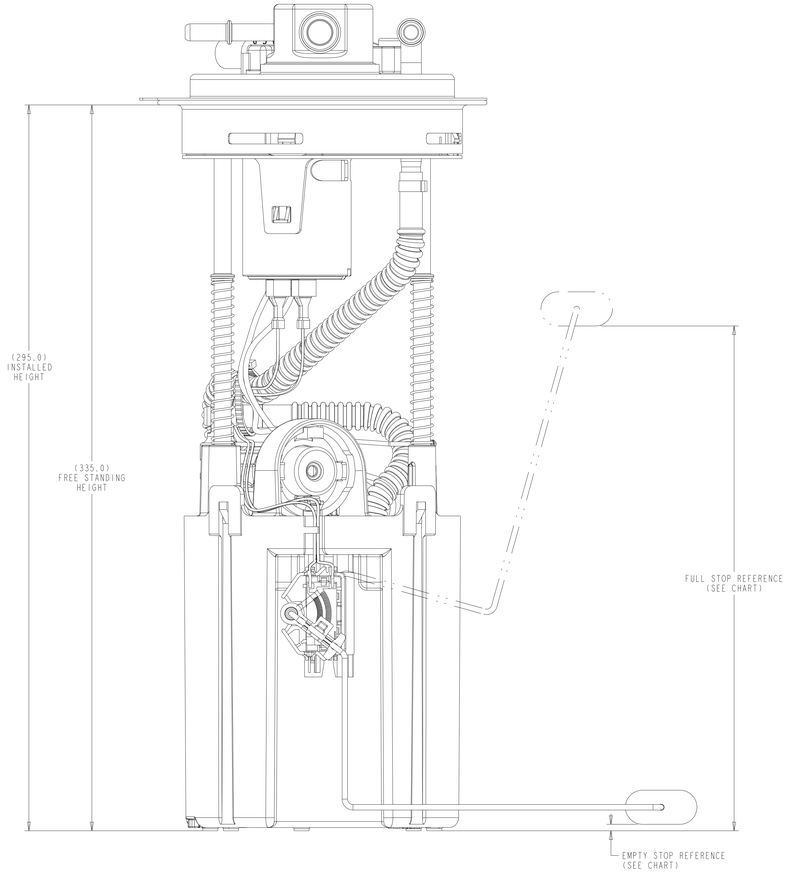

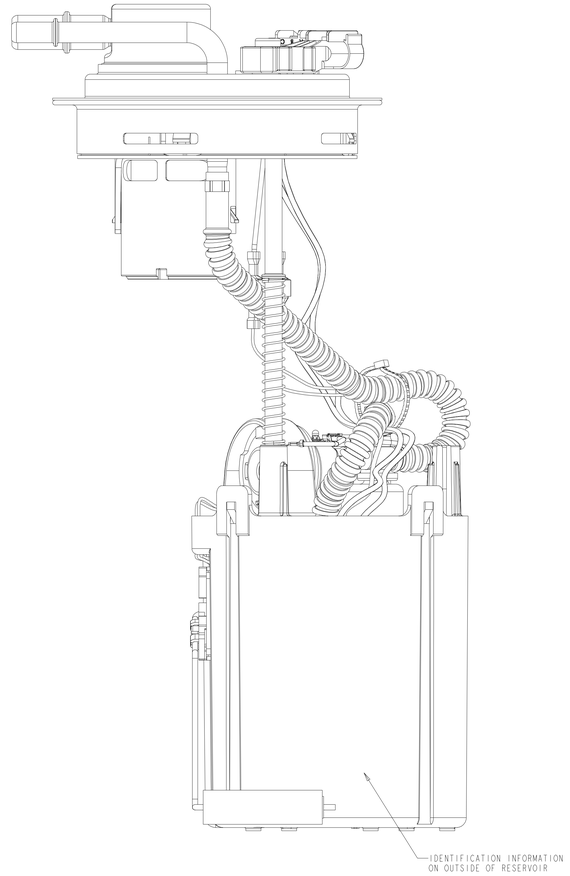

LEVEL SENDER HEIGHT VS. RESISTANCE		
POSITION	HEIGHT	RESISTANCE
FULL STOP	233±1	40±3Ω
EMPTY STOP	3±1	250±3Ω

NOTES:

1. CHANGE IN DESIGN, COMPOSITION, LOCATION OR PROCESSING FROM THE PART PREVIOUSLY APPROVED FOR PRODUCTION REQUIRES PRIOR APPROVAL BY TI AUTOMOTIVE.
2. SPECIAL CUSTOMER PACKAGING REQUIREMENTS MAY CALL FOR THE ADDITION OF SPECIFIC LABELS NOT SHOWN ON THIS DRAWING.
3. SHOWN WIRE ROUTING MAY DIFFER FROM FINISHED PRODUCT.
4. MODULE TO BE PACKAGED USING COMPONENTS NOTED ON BOM SO THAT CONTAMINATION FROM FOREIGN MATERIAL IS PREVENTED:
   - PLUG PROTECTORS ON PORTS
   - POLYBAG

▽ - DENOTES SAFETY CHARACTERISTIC
◇ - DENOTES SIGNIFICANT CHARACTERISTIC
⊕ - DENOTES HIGH IMPACT CHARACTERISTIC

TI AUTOMOTIVE CONFIDENTIAL AND PROPRIETARY
THIS DRAWING IS PROPERTY OF TI AUTOMOTIVE. TI AUTOMOTIVE CLAIMS PROPRIETARY RIGHTS IN THE INFORMATION DISCLOSED HEREON. NEITHER THIS OR ON THIS DRAWING AND RETAINED BY RECIPIENT. NO RIGHTS TO USE THE DRAWING IS PROVIDED FOR REFERENCE PURPOSES ONLY AND ON THE EXPRESS CONDITION THAT IT WILL BE HELD IN CONFIDENCE. THIS DRAWING OR ANY PART THEREOF MAY NOT BE USED FOR ANY PURPOSE OTHER THAN MANUFACTURE BY OR PROCUREMENT FROM OTHERS OF THE ARTICLE OR PART SHOWN WITHOUT TI AUTOMOTIVE'S EXPRESS WRITTEN CONSENT. NO LICENSE OR OTHER RIGHTS TO USE ANY PATENT OR TRADE SECRET IS GRANTED BY OWNING TO RECIPIENT. COPYRIGHT, TI AUTOMOTIVE 2016, ALL RIGHTS RESERVED.

METRIC
ALL DIMENSIONS ARE IN MILLIMETERS

DO NOT SCALE
DECIMAL TOLERANCES UNLESS OTHERWISE SPECIFIED
ONE PLACE ±0.25 TWO PLACE ±0.13 ANGLES ±1°

THIRD ANGLE PROJECTION

DIMENSIONS IN ACCORDANCE WITH ASME Y14.5 - 2009

TI Automotive
630 COLUMBIA ST.
CARO, MI 48723
+1 989.673.7727

ENGINEER	D.CATLIN	26NOV12	MATERIAL/SPECIFICATION: N/A
DES.MANAGER	S.KADY	26NOV12	
DESIGNER	S.KADY	26NOV12	
CAD SYSTEM: PRO/E	SCALE: 1:1		SHEET NO. 1 OF 1
REFERENCE (D/REV):			PLM REFERENCE/REV.: 0001100056/AB
REFERENCE (D/REV): 2D: AR0034235/AB			PLM REFERENCE/REV.: 3D: AR0034234/AB
DRAWING NAME: FUEL MODULE ASSEMBLY (AFTERMARKET GMT900)			
SIZE: A0	DRAWING NUMBER: TU480		